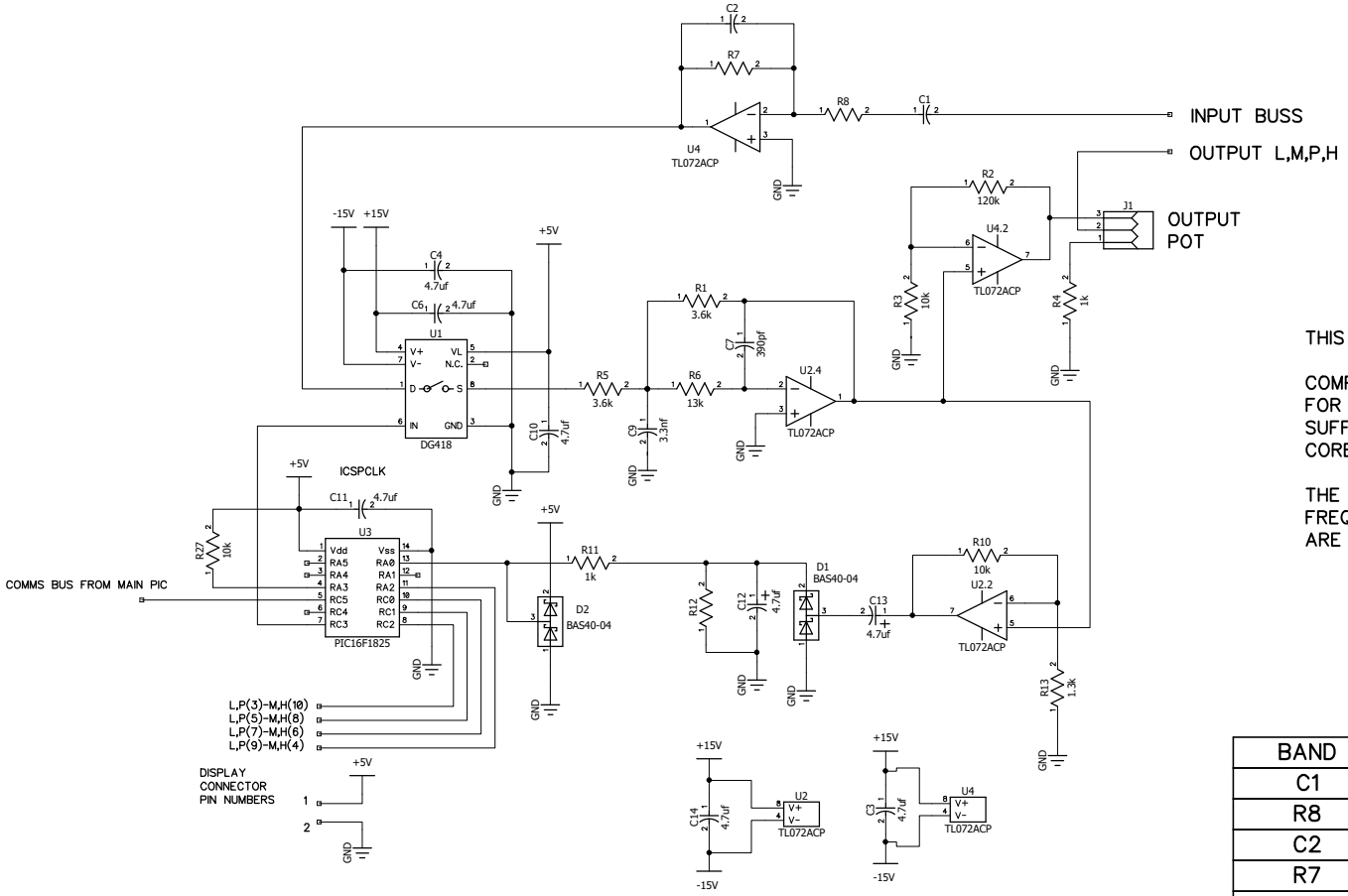

THIS CIRCUIT IS DUPLICATED 4X

COMPONENT NUMBERS ARE IDENTICAL FOR EACH CIRCUIT WITH THE COMPONENT SUFFIX ENDING WITH "L","M","P" OR "H" CORESPONDING TO THE FREQ BAND

THE SELECT VALUES FOR EACH FREQUENCY BAND AND TIME CONSTANT ARE GIVEN IN THE TABLE

BAND	LOW	MID	PRES	HIGH
C1	18nf	12nf	2.2nf	1.8nf
R8	137k	36k	36k	7.5k
C2	3.3nf	2.2nf	390pf	180pf
R7	750k	200k	200k	75k
R12	10k	10k	3.6k	1.3k

BAND PROCESSOR BP-1

SIZE	FSCM NO.	DWG NO.	REV 1.0
SCALE		Sheet 1	

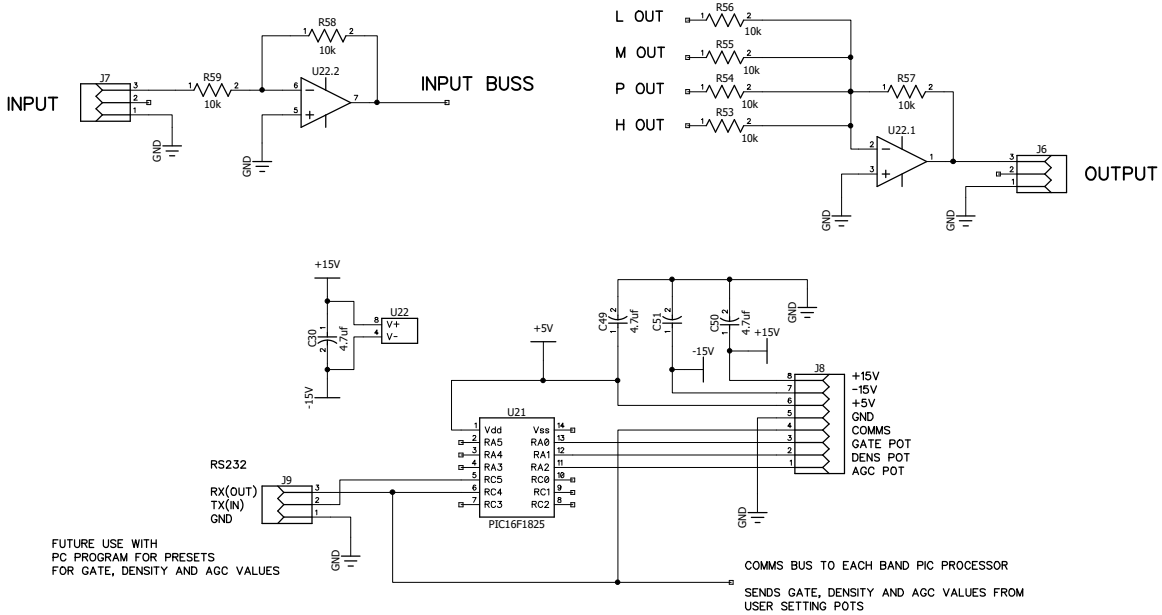

BAND PROCESSOR BP-1

SIZE	FSCM NO.	DWG NO.	REV 1.0
SCALE		Sheet 2	